The professional choice for UK window installers



QFORT®

Windows & Doors

Optimise your profit margin

industry leading **1.2 million sq ft** European factory
with the latest in semi automated technology
delivering premium aluminium windows & doors
at fair prices





QFORT UK Ltd

Our West London showroom, Bicester Distribution Centre and a UK-based team of account managers, service engineers, and logistics teams are on hand - because our **Partners are our priority**

Unlike typical fabricators, we build our windows from **the ground up**

From powder coating semi-profiles, to rolling in the thermal break. We control every aspect of production from CNC milling, to laser cutting, to automatic crimping and hardware assembly.

Engineered to Last is a reality - not just a slogan



Always in stock, because we control our own destiny

Our smart warehouses store
100,000 aluminium profiles at any given time.
Ensuring we are ready to produce and always on time,
regardless of order volume

Extraordinary is ordinary, and Colours is our thing.
Whether bicolour or special RAL, our vertical powder coating line delivers

Scratch resistant paint and seaside use as standard



QUALICOAT

QFORT goes beyond joinery
We produce **14,000 glazing units per week**
using Saint-Gobain glass

Every window and door is delivered fully glazed

WOMAN

AND

MACHINE

Industry leading Aluminium Windows & Doors
With exceptional thermal performance and minimal, slimline aesthetics

Uw values as low as 0.8



Aera

Windows



- 1.0 Uw
- Opens out
- Classic sash available
- Integrated vent

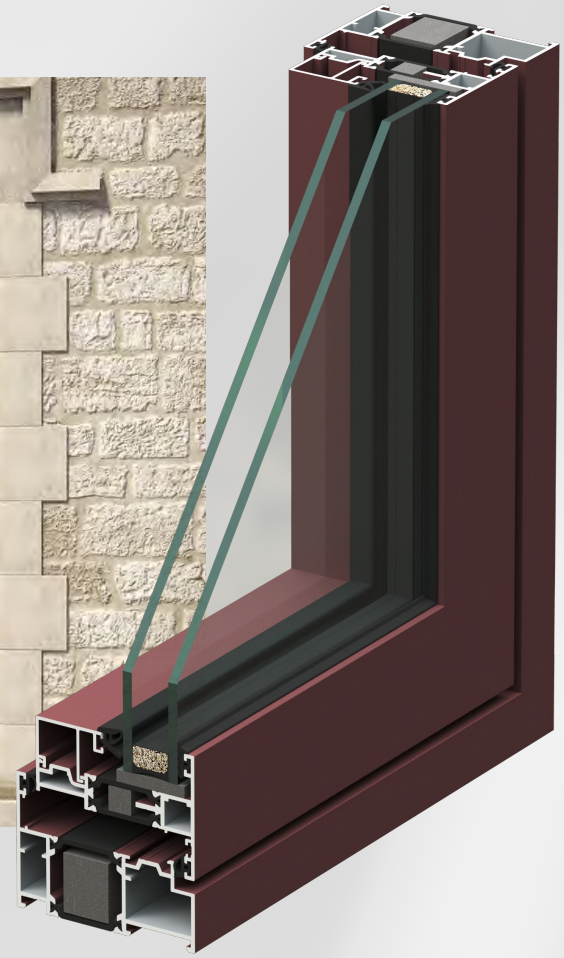





- 1.0 Uw
- Opens in (T&T)
- Hidden sash
- 2.6m H

5 Stars

Panorama

Sliding Doors



- 0.9 Uw
- 3.6m H / 18m W
- 20 or 25mm sightline
- Floating Corner

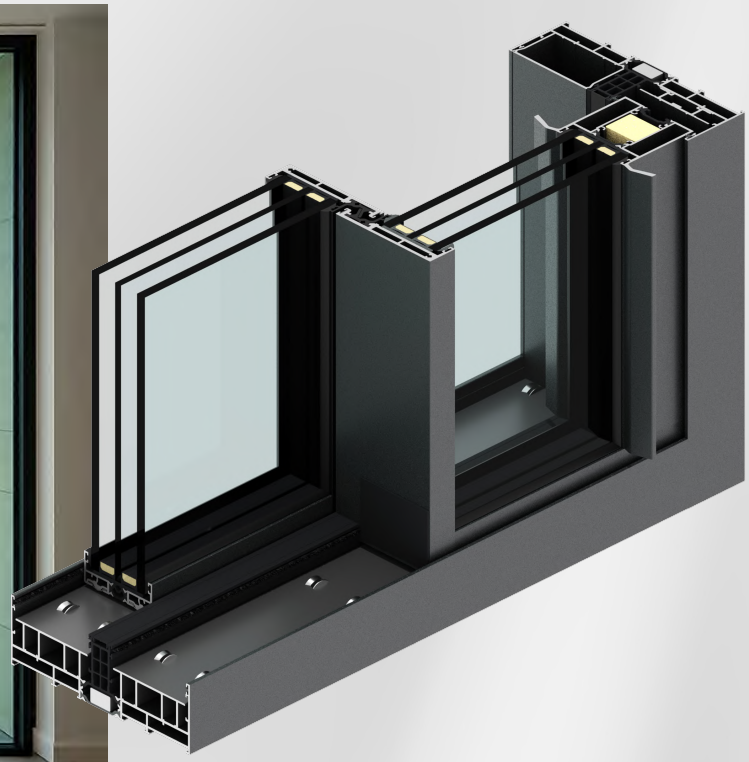

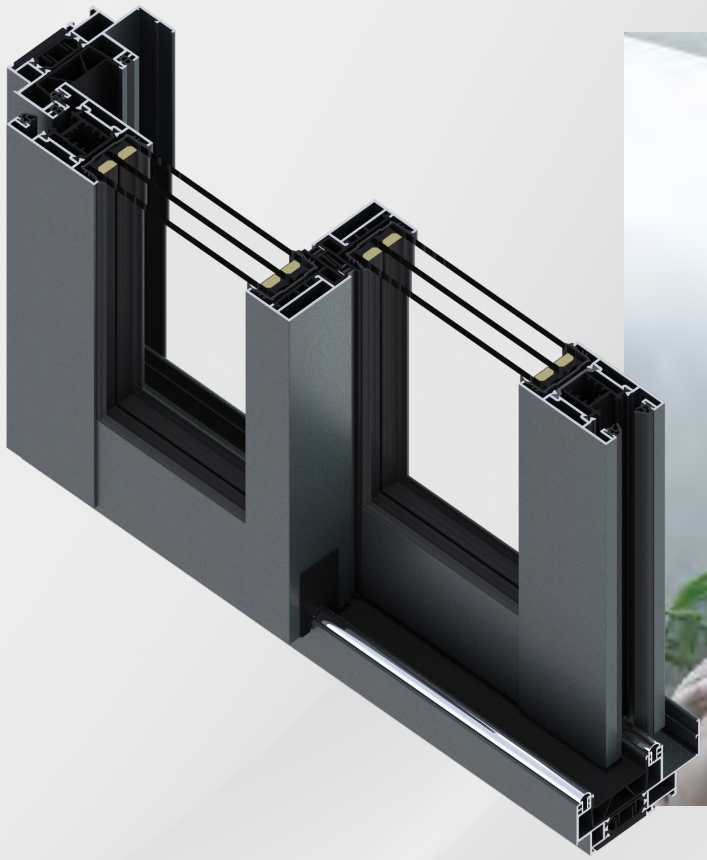



- 1.2 Uw
- 2.6m H / 13m W
- 35mm sightline
- Economical

Paysage

BiFold Plus

Doors

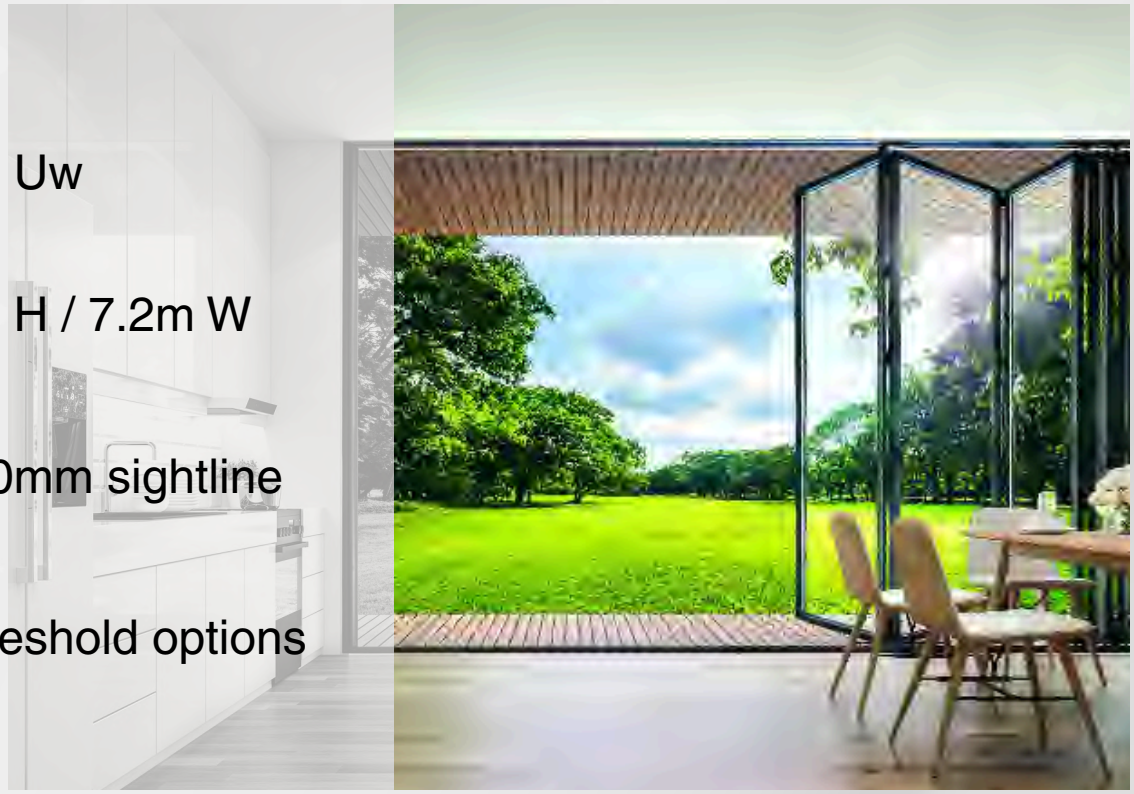

0.8 Uw

3m H / 7.2m W

110mm sightline

Threshold options

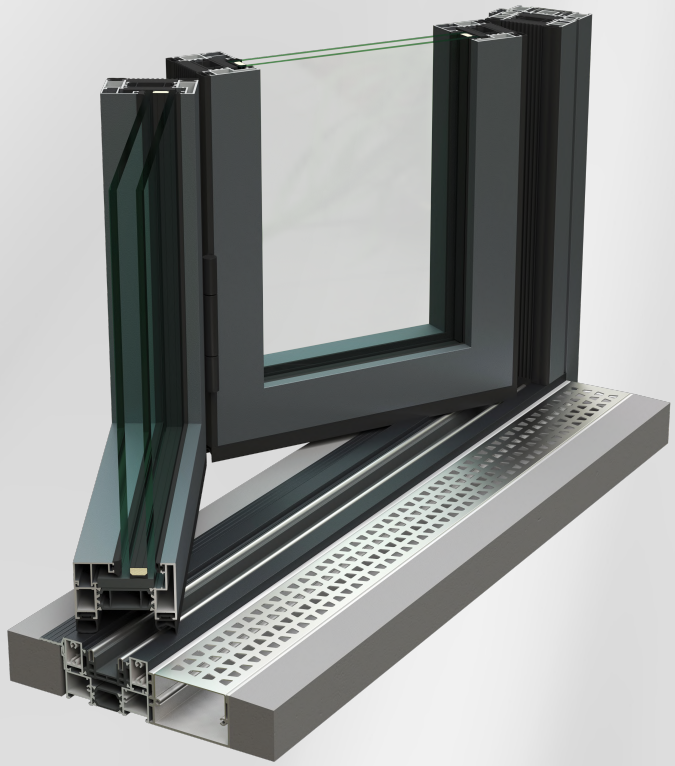





0.9 Uw

2.5m H / 2.4m W

Glazed & Classic options

Flush panel

Doors

Price your projects in minutes

QFORT's pricing software can be used on tablets, offline, and features instant pricing and online ordering

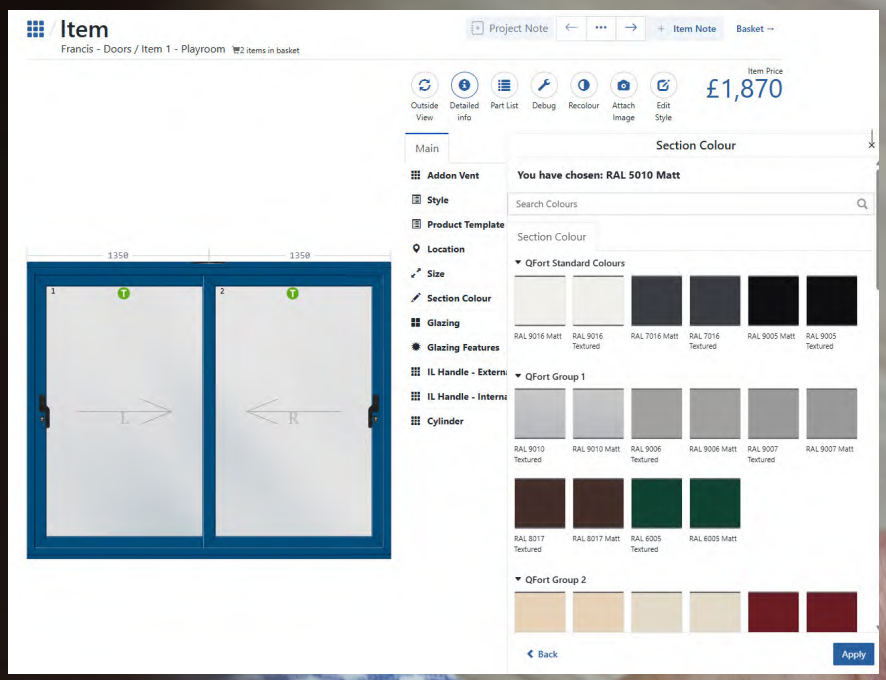



price point™

From EU to You

Our extensive fleet of lorries delivers across Europe, with product landed in the UK in as little as **4 weeks**. Imported and sold to you by QFORT UK Ltd




PARTNERS
WINNING COMBO
R & D GOATLEY - PROUD TO BE THE SUSSEX PROVIDER OF QFORT WINDOWS & DOORS
QFORT®

Increase your average order value, create a luxury showroom experience

From concept to creation, we offer a **showroom design service** with customised colour and handle boards




QFORT
Aluminium Colour Chart
Group 1
Group 2

QFORT® Academy

Training Partners for Success



A training program that covers everything from company and products, to UK building regulations, competition, and installation

PARTNERSHIP MEANS MORE



Distributors & Installers

Register your interest

contact.uk@qfort.com

QFORT UK Showroom - TW20 8RN

London Showroom
Online 3D Tour